WILDERNESS SPORT RACK SERIES

General Assembly Instructions

PART # 42604 Size: 4' 2" x 6' x 4"

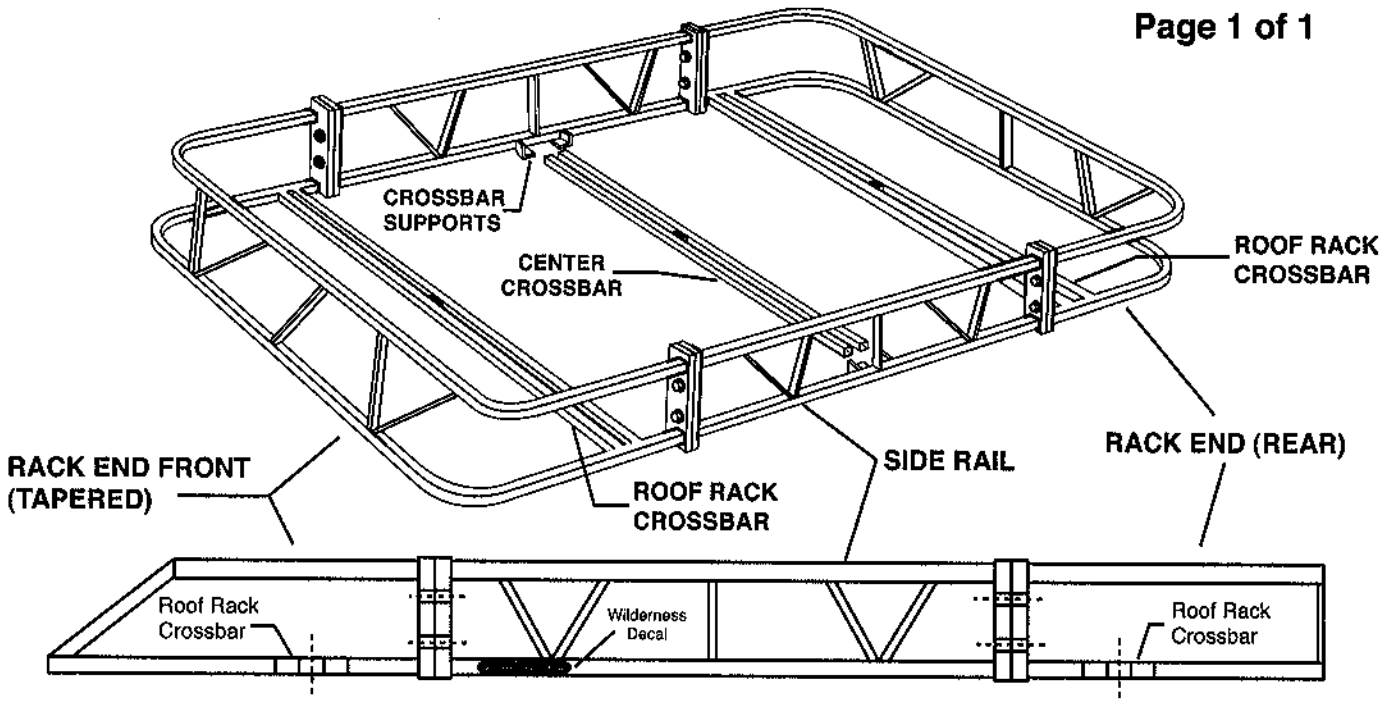

PARTS LIST

- 1 - FRONT RACK END (TAPERED)
- 1 - REAR RACK END (EVEN)
- 2 - SIDES (48 1/4" x 4") (WITH 1" ANGLE WELDED ON)
- 1 - CROSSBAR (48 5/8")
- 4 - BLACK CROSSBAR PLUGS
- 1 - BOLT KIT # 2000
- 2 - 3/8 X 1 1/2 BOLTS
- 2 - 3/8 THIN NYLON LOCKNUTS
- 2 - 3/8 FLATWASHERS (1" DIA.)
- 2 - 3/8 H.D. FLATWASHERS (1 3/8" DIA.)

LIGHT MOUNTING BRACKET (each)
PART # 88140 Front only
PART # 88134 Rear and side

ROOF RACK ASSEMBLY

1 - Assemble roof rack ends to roof rack sides as shown in FIGURES A & B.
2 - Install black plastic plugs into crossbar ends FIGURE C.
3 - Install crossbar to crossbar supports as shown in FIGURE C.
4 - Align roof rack,crossbar and tighten all fasteners.
5 - Roof rack flooring and vehicle mounting are shown in their respective installation instructions.

CAUTION!!! LOADING and WEIGHT CAPACITY

1 - Use common sense when loading items on this roof rack.
2 - The roof rack will support more weight than the vehicle roof mounting will safely support.
3 - As a general rule up to 200 Lbs. evenly distributed is a safe load for this rack.

FIGURE A

When installing the side rails to the rack ends, the even sides must face outside.

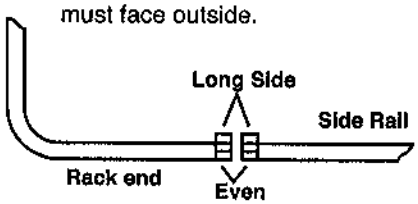

Top View

FIGURE B

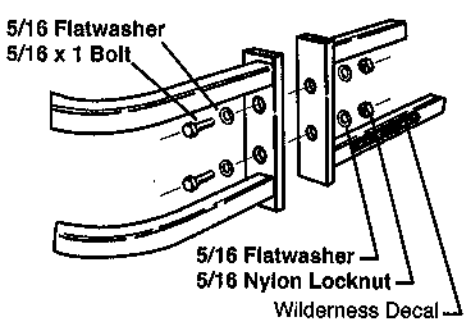

FIGURE C

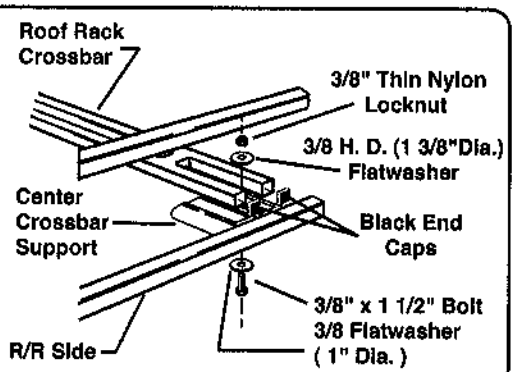

MFG. BY GARVIN INDUSTRIES 316 MILLAR AVE EL CAJON CA. 92020 (619) 440 7415

Wilderness Roof Rack Mounting Kit

Part # 28023

Parts List

6-Crossbar Top Brackets
6-Middle Brackets
6-Bottom Clip Brackets
6-3/8 x 1 1/2 Carriage Bolts
6-3/8 H.D. Flatwashers(1 3/8"dia.)
1-5/32 Allen Wrench
6-3/8 Thin Nylon Locknuts
24-6mm x 20mm Allen Head Bolts
24-6mm Nylon Locknuts
36-6mm Flatwashers(1/2"dia.)
12-1/4" Flatwashers(5/8"dia.)

Installation Instructions

1. Assemble roof rack and flooring as per instructions. Leave the two outboard floors loose for later adjustment.
2. Assemble mounting brackets as shown in figure B. Leave loose for easier installation.
3. Remove one end cap on each side of factory rack and remove crossbars. Re-install end caps and tighten. Refer to figure A.
4. Install three mounting clamps on each factory rack, as shown in figures A & B. For 91-02 Cherokee XJ applications, use the 26 1/2" spacing for mounts A,B & C. Position rack to your preference on the roof. For 93-98 Grand Cherokee applications, use measurements as shown in figure A.
5. After positioning mounting clamps on factory rack, slightly tighten to hold in place.
6. With some help, set the assembled roof rack on the six mounting brackets. Secure the roof rack to the mounts as shown in figures C & D. Center roof rack on vehicle(side to side) and slightly tighten mounting hardware to hold in place.
7. The top mounting bracket is adjustable up and down on the middle bracket, this takes the tension off between the Wilderness Rack and the factory rack. After aligning the Wilderness rack on the vehicle, the 6mm allen head bolts that secure the top bracket to the middle bracket are the last to tighten.
8. Cherokee XJ applications, let the rack set on the vehicle and find its own position before tightening the 6mm bolts on the adjustable mounting clamps. Grand Cherokee applications, the adjustable clamps must be adjusted as explained in figure A.
9. After rack has been aligned, re-position the outboard floors and tighten all mounting hardware.
10. **CAUTION!!! LOADING AND WEIGHT CAPACITY**, use common sense when loading items on this roof rack. The roof rack will support more weight than the vehicle roof mounting will safely support. Use manufacturers weight limits as a guide for loading this roof rack.

WILDERNESS ROOF RACK
MOUNTING KIT

PART# 28023

FIGURE A

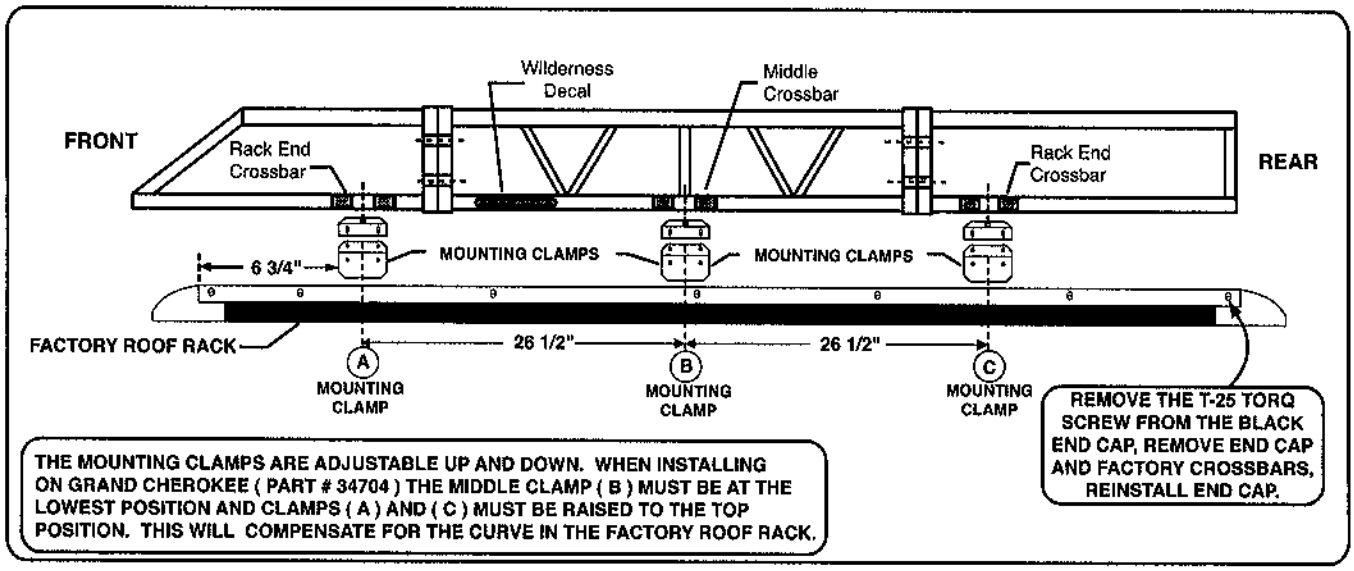

FIGURE B (MOUNTING CLAMP ASSEMBLY)

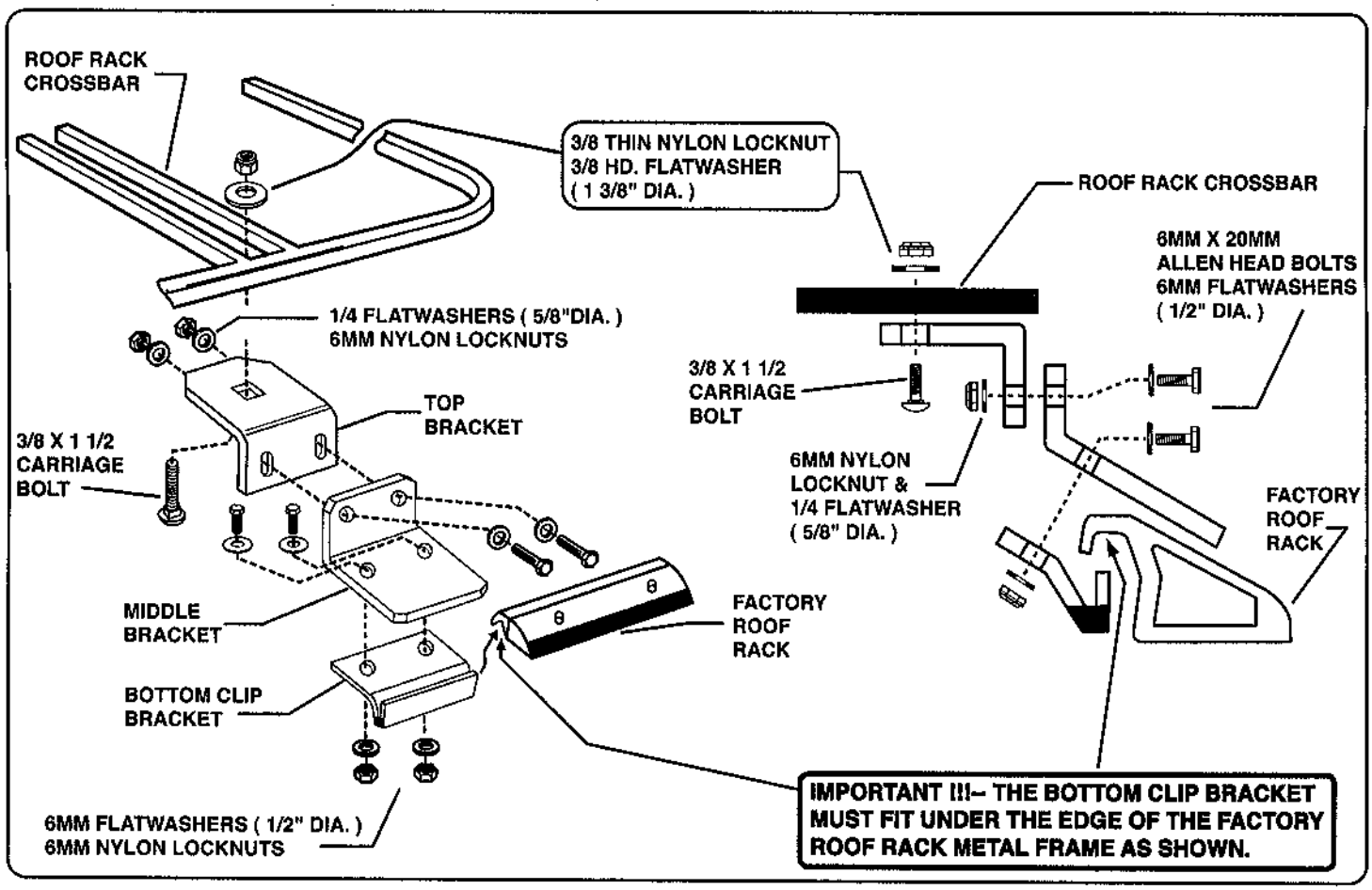

DRAWING# RR MOUNT # 28023-A

WILDERNESS ROOF RACK
MOUNTING KIT

PART# 28023

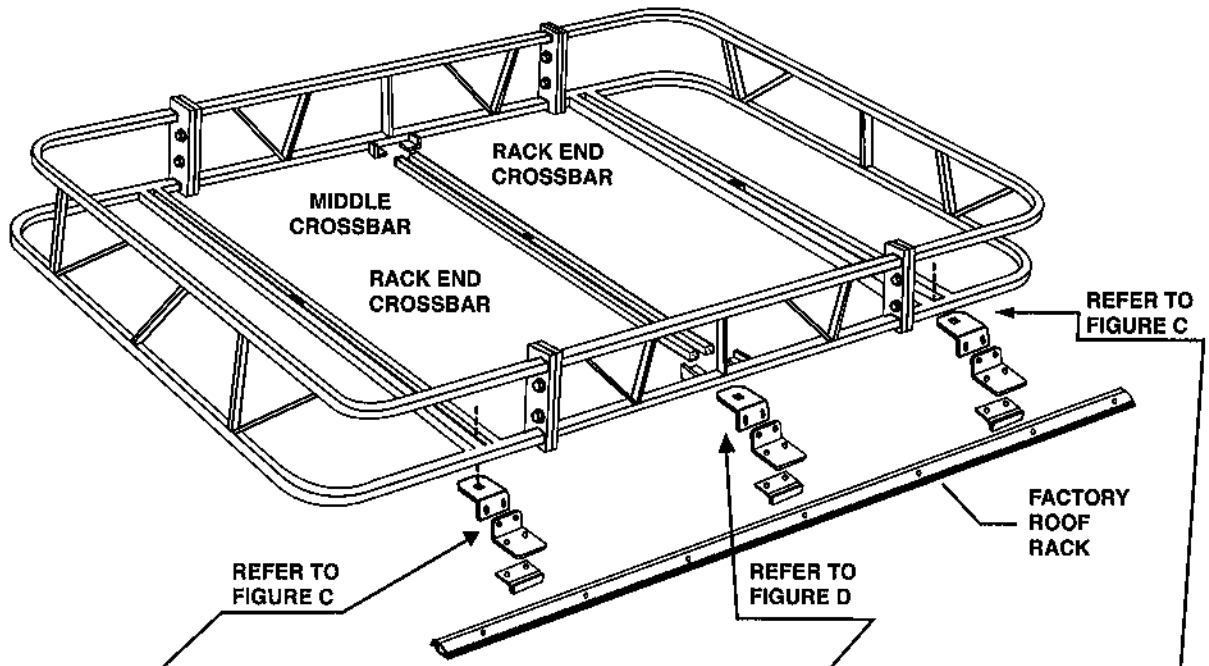

FIGURE C (Rack end crossbar mounting)

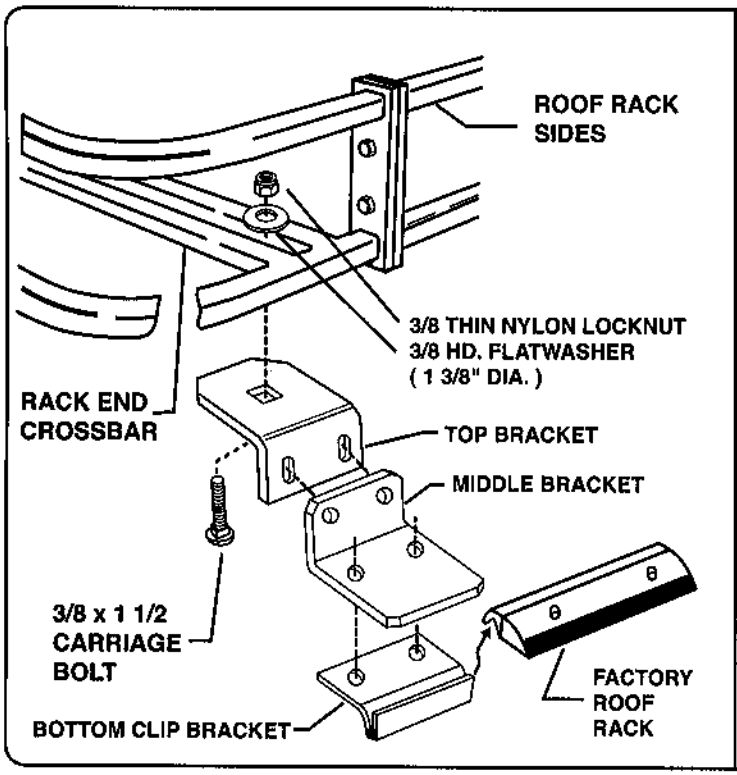

FIGURE D (Middle crossbar mounting)

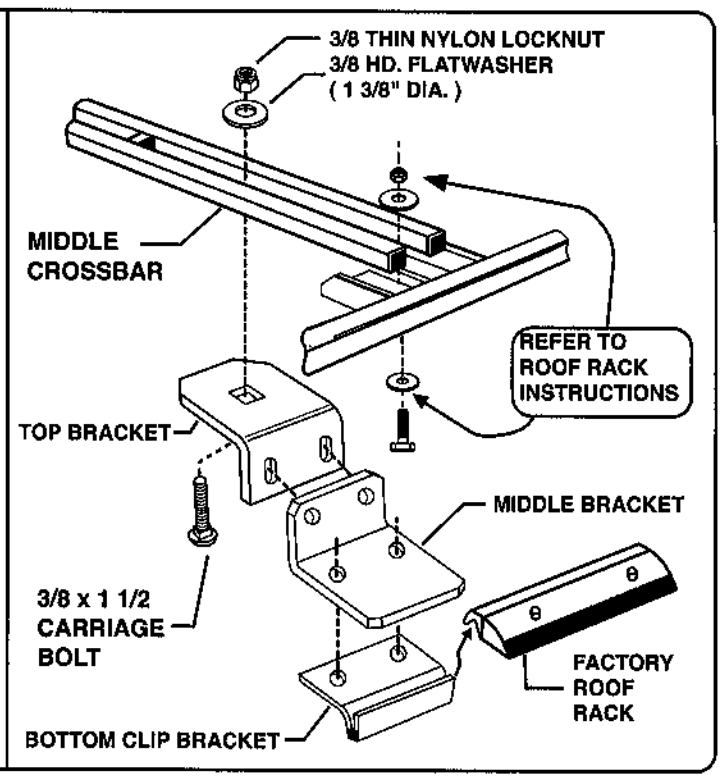

WILDERNESS ROOF RACK FLOORING

General Assembly Instructions

PART # 11606

FIGURE A

Install black plastic plugs into end of flooring. **Use silicon around plug before installing for added protection in (wet) weather conditions.**

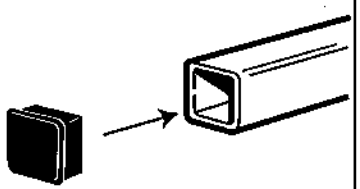

BLACK PLASTIC END CAP

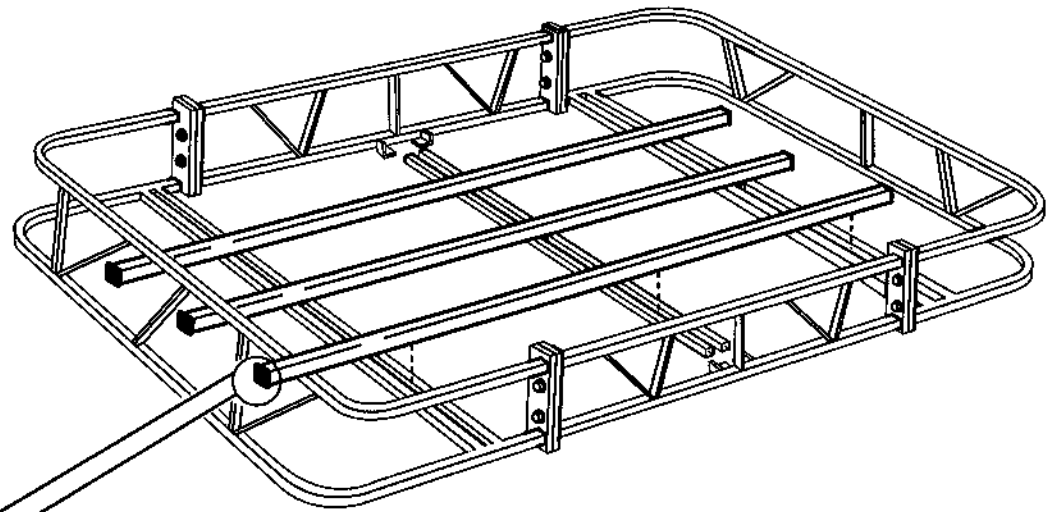

FIGURE B

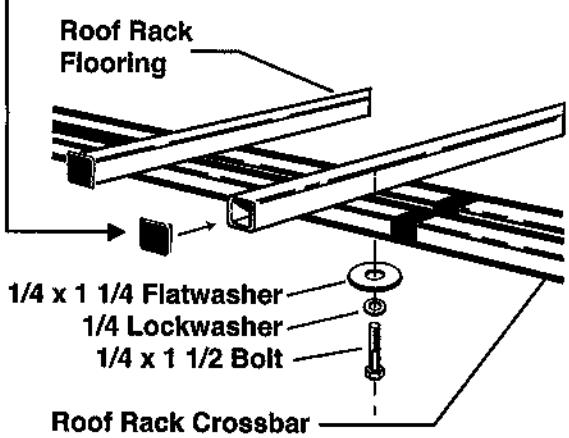

Apply Loctite to threads of 1/4 x 1 1/2" bolts for off road use.

SEE YELLOW CAUTION SHEET BEFORE TIGHTENING BOLTS

THE FLOORS MOUNT ON TOP OF THE ROOF RACK CROSSBARS AND ARE COMPATABLE WITH EITHER THE SPORT SERIES OR THE OFF ROAD SERIES ROOF RACKS.

PARTS LIST

6 - FLOOR PIECES (61 7/8")

1 - FLOORING BOLT KIT

PLUS THESE ADDITIONAL PARTS

6 - 1/4 X 1 1/4" BOLTS
6 - 1/4 LOCKWASHERS
6 - 1/4 FLATWASHERS (1 1/4" DIA.)

INSTALLATION INSTRUCTIONS

1 - INSTALL BLACK PLASTIC END CAPS IN FLOOR ENDS (FIGURE A)
2 - INSTALL FLOORS TO ROOF RACK CROSSBARS (FIGURE B)
3 - START ALL BOLTS IN FLOORING (FIGURE B), LEAVE BOLTS LOOSE, EVENLY SPACE FLOORS ON ROOF RACK.
4 - ALIGN FLOORS AND THEN READ THE YELLOW CAUTION SHEET (ENCLOSED) BEFORE TIGHTENING 1/4 X 1 1/2" BOLTS.
5 - THE TWO OUTSIDE (OUTBOARD) FLOORS MAY HAVE TO BE RE-ADJUSTED TO CLEAR THE MOUNTING BOLTS AS THEY COME UP THROUGH THE CROSSBARS.
6 - WHEN INSTALLING THE SPARE TIRE CARRIER PART# 29880, THE TWO MIDDLE FLOORS MUST BE SPACED SO THE OUTSIDE MEASUREMENT IS 5 3/8".

MFG. BY GARVIN INDUSTRIES 316 MILLAR AVE EL CAJON CA. 92020 (619) 440 7415